Comparison of Neural Models for Modeling Dynamic Changes in Microgrids

Slavomír Kajan
Institute of Robotics and Cybernetics
Slovak University of Technology
Ilkovičova 3, Bratislava 81219,
Slovak Republic
slavomir.kajan@stuba.sk

Peter Mácsik
Institute of Robotics and Cybernetics
Slovak University of Technology
Ilkovičova 3, Bratislava 81219,
Slovak Republic
peter.macsik@stuba.sk

Ladislav Körösi
Institute of Robotics and Cybernetics
Slovak University of Technology
Ilkovičova 3, Bratislava 81219,
Slovak Republic
ladislav.korosi@stuba.sk

Jozef Goga
Institute of Robotics and Cybernetics
Slovak University of Technology
Ilkovičova 3, Bratislava 81219,
Slovak Republic
jozef.goga@stuba.sk

Jarmila Pavlovičová
Institute of Robotics and Cybernetics
Slovak University of Technology
Ilkovičova 3, Bratislava 81219,
Slovak Republic
jarmila.pavlovicova@stuba.sk

***Abstract*—Connecting renewable resources to the electricity network while ensuring the voltage and frequency stability of the network is not an easy task. Optimizing performance, ensuring stability, and efficiency are the main features of smart grids. To ensure network stability, it is necessary to model dynamic events in the smart grid. This paper deals with the comparison of neural models for modeling dynamic changes in the microgrid. The simulations were carried out on a single-node microgrid with solar energy and batteries in the MATLAB environment. Nonlinear autoregressive exogenous model (NNARX), Long short-term memory (LSTM), Gated recurrent unit (GRU) models were used to model the dependence of voltage on load change and battery mode. Individual neuron models are graphically compared and their quality evaluated.**

Keywords— neural model, microgrid, NNARX, LSTM, GRU, neural network

I. Introduction

Nowadays, how to obtain and connect energy from renewable sources to the electricity network while ensuring voltage and frequency stability is a popular topic among researchers. Among renewable sources, solar energy has the greatest potential for use. The solution of how to connect renewable resources to the electricity network is the creation of smart grids. Optimizing performance, ensuring stability, and efficiency are the main features of smart grids. The grid itself can be divided into several separate microgrids. To ensure network stability, it is necessary to model dynamic events in the microgrid. One modeling approach is to create an analytical model that needs to be properly parameterized [1-7]. The main disadvantage of this approach is the complexity of the physical model with a large number of parameters and the need for an expert in the parameterization of the model. Our approach creates a dynamic model from the measured data using neural networks [8-13]. The most popular neural network model for modeling nonlinear dynamic systems is the so called NNARX model [9,14], which uses a multi-layer feedforward perceptron network to model the parameters of the linear ARX model [14]. Nowadays, recurrent neural networks (RNN) [15], specifically models with LSTM and GRU [10-13], are more often used to model non-linear dynamic systems. This paper aims to compare these neural network models on the basis of their ability to model dynamic changes in the microgrid. Data for training and testing purposes were obtained from a single-node grid simulation model, which includes solar energy and batteries in the MATLAB environment [1]. Models were used to model the dependence of voltage on load change and battery mode. Models are compared graphically and evaluated for quality.

II. Simulation Model of Microgrid and Data for Neural Models

As an example of a microgrid, we chose a single-node microgrid with solar energy, batteries, and variable load [1]. The microgrid simulation scheme was created in the MATLAB environment using the Simscape Power Systems library [17]. The block diagram of the microgrid is shown in Fig. 1. The nominal parameters of the electrical network are a voltage of 5 kV and frequency of 50 Hz. The nominal performances of individual energy sources and loads are shown in TABLE I. Change in grid voltage and frequency was achieved by changing load scenarios and battery charging modes. We also alternated the battery charging and discharging modes with load changes.

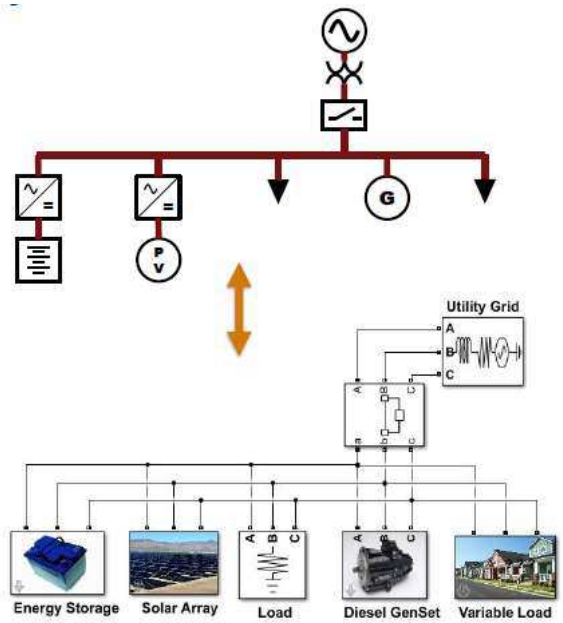

Fig. 1: Block diagram of a single-node microgrid [1].

978-1-6654-8775-7/22/$31.00 ©2022 IEEE

The time responses of input variables on the grid (variable load and battery power) are shown in Fig. 2. The input into the neural network was formed by the sum of these two input variables. The time responses of the grid output variables (grid voltage and frequency) are shown in Fig. 3 and Fig. 4, respectively. The simulation data were captured with a sampling period of 0.01 s.

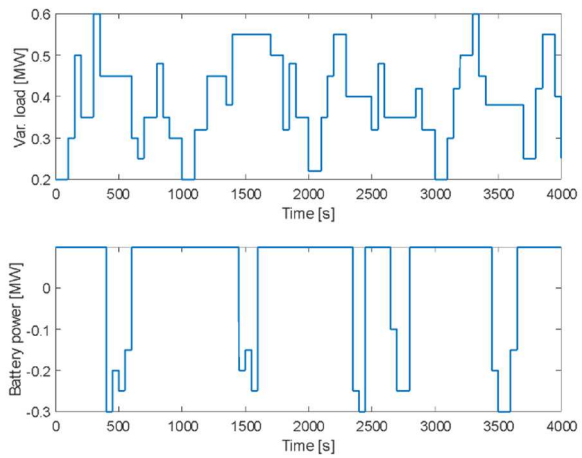

Fig. 2: Time responses of variable load and battery power.

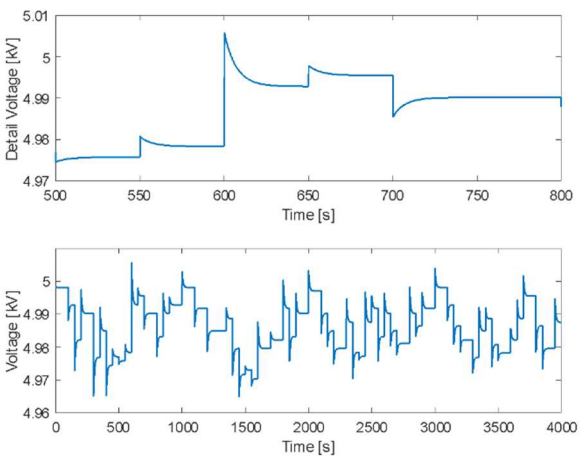

Fig. 3: Time responses of grid voltage.

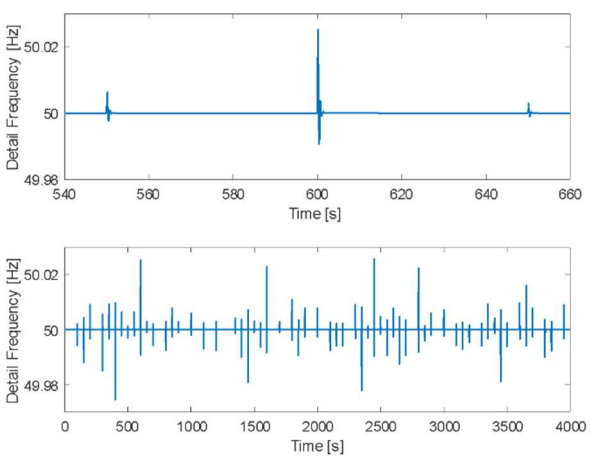

Fig. 4: Time responses of grid frequency.

TABLE I: Nominal power of sources and energy consumption.

	Diesel Generator	**Solar Energy**	**Battery Energy**	**Fixed Load**	**Variable Load**
Nominal Power [MW]	1	0,25	0,3	0,5	0,2-0,6

III. Compared Neural Network Models

The aim of this paper was to verify the suitability of individual neural network models for the purpose of modeling dynamic processes in microgrids. For the comparison of neural network models, we chose the NNARX model with a multilayer perceptron network and two RNN models. The first RNN model uses an LSTM network. The second RNN model uses a GRU network.

A. NNARX model

A nonlinear autoregressive neural network with exogenous inputs (NNARX) is a recurrent dynamic network with feedback connections that close several layers of the network. The NNARX model is based on the linear ARX model, which is commonly used in time series modeling [16]. The NNARX model is made up of a multilayer perceptron network (MLP), where the inputs are the past values of the input u and output y of the modeled system. The neural network is trained in an open loop (Fig. 5a) and subsequently after learning, feedback is applied to the input of the network, where the past values of the system are replaced by the prediction of the neural network (Fig. 5b).

The output of the NNARX model is defined by the following equation:

$$\hat{y}(t) = f\begin{pmatrix} y(t-1), y(t-2), \dots, y(t-n), \dots \\ u(t-1), u(t-2), \dots, u(t-m) \end{pmatrix} \quad (1)$$

where $y(t)$ is the system output, $u(t)$ is the system input, n is the order of the output, m is the order of the input, and f is the nonlinear function approximated by the forward MLP network.

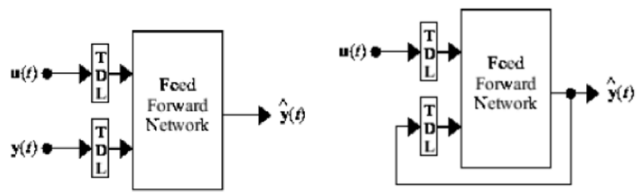

Fig. 5: Architecture of the NNARX model with a feedforward multilayer perceptron network (left (a) – open loop connection, right (b) – closed loop connection) [16]

B. LSTM and GRU models

The LSTM approximation network contains an input sequential layer, an LSTM layer, a fully connected layer, and a regression layer. In the structure of the LSTM network, the number of hidden neurons (units) in the LSTM layer is set. The architecture of the LSTM network is shown in Fig. 6. [16]. By replacing the LSTM layer (Fig. 7) with a GRU layer, we get a GRU network (Fig. 8). An LSTM and GRU layers learn long-term dependencies between time steps in time series and sequence data. In the LSTM layer, the cell state, hidden state, and output state are updated based on the time series data, previous cell state, and hidden state. The layer controls these updates using gates. The GRU layer represents a simplified version of the LSTM layer.

Fig. 6: Architecture of LSTM Recurrent Neural Network [16]

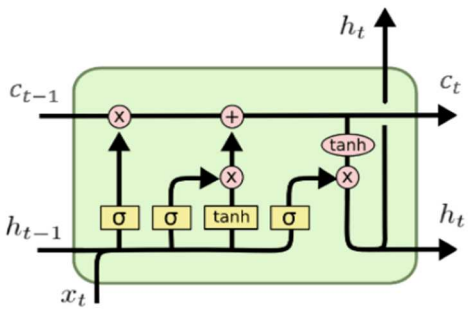

Fig. 7: Architecture of the LSTM layer

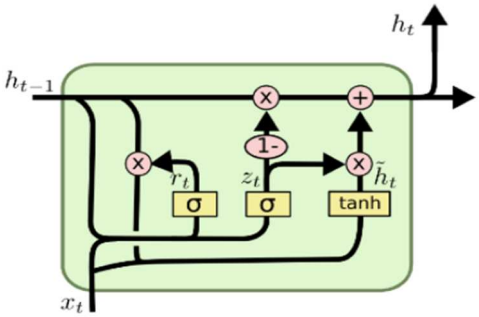

Fig. 8: Architecture of GRU layer

IV. Experimental Results

The neural network models were trained and tested on simulated data from a single-node microgrid [1], where the input to the model is the time course of changes in power load and the outputs are the voltage and frequency patterns of the microgrid. For the voltage model, we set up sampling period of 0.2 s and for the frequency model 0.02 s. For the NNARX model, we chose for the input the number of past values n=5, and for the output the number of past values m=3. In the case of neurons in the hidden layer for the voltage, we chose 12 and for the frequency model 25 neurons. The structure of the NNARX model is shown in Fig. 9. The training and testing of the neural models was carried out in MATLAB using the Deep Learning Toolbox [16].

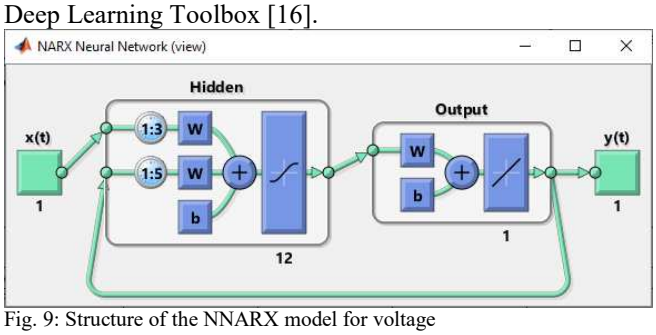

Fig. 9: Structure of the NNARX model for voltage

As a criterion function during the training process, we use the mean square error (MSE). The MSE is defined by the following relationship as the average sum of squares of deviations between the output of the model y_m and the output of the modeled system y_s.

$$MSE = \frac{1}{N}\sum_{t=1}^{N}\left(y_s(t) - y_m(t)\right)^2 \qquad (2)$$

The NNARX model training process for open-loop voltage is shown in Fig. 10. For training epochs, we were set 250 and 100, for the voltage model and for the frequency model, respectively. The MSE errors on the training and test data for the best trained NNARX models are presented in TABLE II.

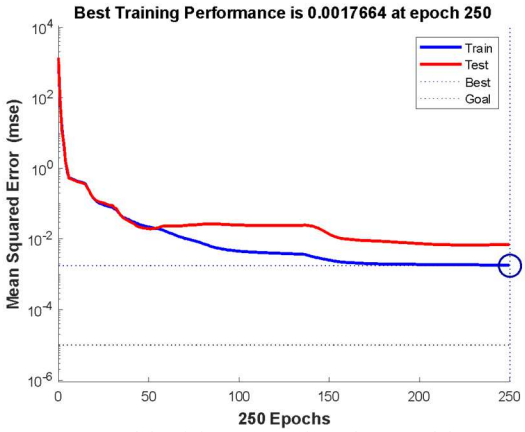

Fig. 10: NNARX model training process for voltage model

TABLE II: MSE error values for the NNARX model

	Train Data Open loop	Test Data Open loop	Train Data Close loop	Test Data Close loop
Voltage	3.983e-4	0.0181	1.7137	0.5997
Frequency	3.6109e-10	5.4573e-10	5.0828e-08	7.5965e-08

In the case of the LSTM and GRU models, we chose a network structure with two hidden layers, with a dropout layer in between with a probability parameter of 0.5. For the closed-loop model, the input was a time sequence of load changes. For an open loop, the system output sequence has been shifted by one sample. We set the number of neurons in the hidden layers to 200. For model training, we set 500 training epochs and with Adam learning optimizer. Visualization of the LSTM model training process for closed-loop voltage is shown in Fig. 11.

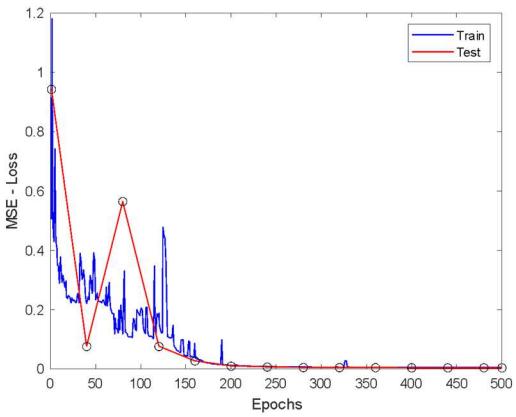

Fig. 11: LSTM model training process for the voltage model.

The MSE errors on the training and test data for the best LSTM and GRU models are presented in TABLE III and TABLE IV. The best results for the open loop were obtained with the NNARX model, and the comparison of this model with the data is shown in Fig. 12. The best results for the close

loop were obtained with the LSTM model, and the comparison of this model with the data is shown in Fig. 13.

TABLE III: MSE error values for the LSTM model.

	Train Data Open loop	Test Data Open loop	Train Data Close loop	Test Data Close loop
Voltage	0.0223	0.0225	0.0178	0.0255
Frequency	1.0477e-09	9.9472e-10	2.1658e-08	3.1230e-08

TABLE IV: MSE error values for the GRU model.

	Train Data Open loop	Test Data Open loop	Train Data Close loop	Test Data Close loop
Voltage	0.0057	0.0053	0.0095	0.1697
Frequency	9.8401e-10	9.6988e-10	1.7097e-08	4.7946e-08

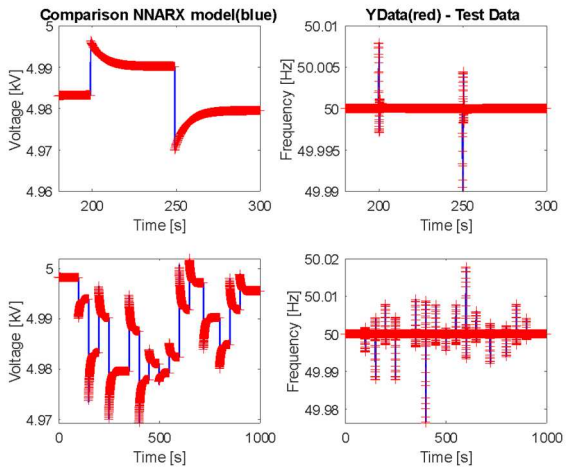

Fig. 12: Comparison of the open-loop NNARX model.

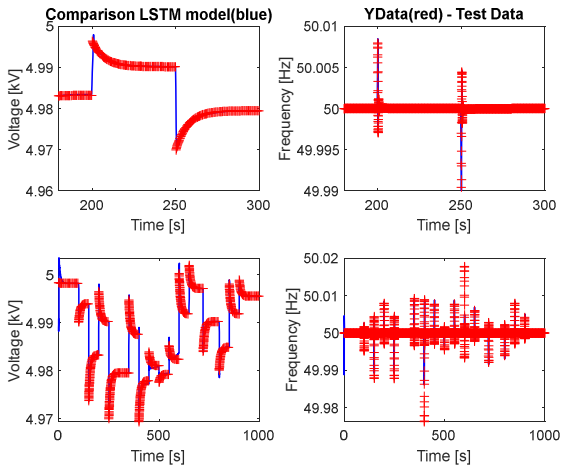

Fig. 13: Comparison of the closed-loop LSTM model.

V. Conclusion

In this paper, we compared neural network models such as NNARX, LSTM and GRU for modeling dynamic changes in smart grid. Data for training and testing of these models were obtained from a single-node microgrid simulation model, which includes solar energy and batteries in the MATLAB environment. These neural network models were used to model the dependence of voltage on load change and battery mode. Models are compared graphically and evaluated for quality. Our experiments have shown that the NNARX model is the most suitable for short-term prediction in an open loop. However, the LSTM and GRU models with feedback from the model output of the model are more suitable for closed-loop prediction, of which the LSTM model is the best. In real deployment, a model with the ability to make longer prediction is required, and especially a model that ensures stability. The NNARX model does not meet these requirements, for this reason, the LSTM model came out of the testing as the most suitable among tested models.

Acknowledgment

This publication was created thanks to support under the Operational Program Integrated Infrastructure for the project: International Center of Excellence for Research on Intelligent and Secure Information and Communication Technologies and Systems - II. stage, ITMS code: 313021W404, co-financed by the European Regional Development Fund.

References

[1] J. LeSage (2021). Systems-Level Microgrid Simulation from Simple One-Line Diagram, MATLAB Central File Exchange. Retrieved March 2, 2021.

[2] P. Basak, S. Chowdhury, S.P. Chowdhury (2013). Simscape based modeling and simulation of a PV generator in microgrid scenario, 22nd International Conference and Exhibition on Electricity Distribution (CIRED 2013), Stockholm

[3] R. AbdelHady (2017). Modeling and simulation of a micro grid-connected solar PV system, Water Science 31 , Egypt, p. 1–1

[4] Abir Muhtadi; Ahmed Mortuza Saleque (2017). Modeling and simulation of a microgrid consisting solar PV & DFIG based wind energy conversion system for St. Martin's island, 2017 IEEE 3rd International Conference on Engineering Technologies and Social Sciences (ICETSS)

[5] S.Priya, M.Marimuthu, S.Vijayalakshimi, S. Prassanna Perumal (2018). Modelling and simulation of hybrid (wind and solar) for DC microgrid, International Journal of Scientific & Engineering Research Volume 9, Issue 3, March-2018

[6] Obaidullah Lodin, Nitin khajuria,Satyanand Vishwakarma, Gazia Manzoor (2019). Modeling and Simulationof Wind Solar Hybrid System using Matlab/Simulink, International Journal of Innovative Technology and Exploring Engineering (IJITEE)ISSN: 2278-3075, Volume-8, Issue-9S, July 2019

[7] M.A. Fouad, M.A. Badr, M.M. Ibrahim (2019). Modeling of Micro-Grid System Components using MATLAB/Simulink, International Journal of Systems Signal Control andEngineering Application, Page No.: 93-104Volume: 12, Issue 4, 2019

[8] T. B. Lopez-Garcia, A. Coronado-Mendoza, J. A. Domínguez-Navarro, Artificial neural networks in microgrids: A review, Engineering Applications of Artificial Intelligence 95 (2020)

[9] A. Alzahrani, P. Shamsi, M. Ferdowsi, C. Dagli, Modeling and simulation of a microgrid using feedforward neural networks, IEEE 6th International Conference on Renewable Energy Research and Applications (ICRERA), (2017)

[10] Y. Li, J. Yang, H. Wang, J. Cui, Y. Ma, S. Huang, Dynamic equivalent modeling for microgrid based on GRU, 7th International Conference on Power and Energy Systems Engineering, (2020)

[11] U. B. Tayab, A. Zia, F. Yang, J. Lu, M. Kashif (2020), Short-term load forecasting for microgrid energy management system using hybrid HHO-FNN model with best-basis stationary waveletpacket transform, Energy, Volume 203, 2020

[12] M. Aslam, J. M. Lee, H. S. Kim, S. J. Lee, S. Hong (2020), Deep Learning Models for Long-Term Solar Radiation Forecasting Considering Microgrid Installation: A Comparative Study, Energies 2020, Volume 1

[13] Y. Wang, W. Liao, Y. Chang, (2018), Gated Recurrent Unit Network-Based Short-Term Photovoltaic Forecasting. Energies 2018, 11, 2163. https://doi.org/10.3390/en11082163

[14] N. Kishor, R.P. Saini, S.P. Singh, (2004). Small hydro power plant identification using NNARX structure. Neural Computing & Applications, 14, 212-222.

[15] M. Han, Z. Shi, W. Wang, (2004) Modeling Dynamic System by Recurent neural network with State variables , International Symposium on Neural Networks, 2004 – Springer

[16] M. H. Beale, M. T. Hagan, H. B. Demuth, (2021) Deep Learning Toolbox User's Guide, The MathWorks.

[17] Simscape Toolbox User's Guide, The MathWorks. (2021)

[18] S. Hochreiter, J. Schmidhuber (1997) Long Short-Term Memory. Neural Comput 1997; 9 (8): 1735–1780. doi: https://doi.org/10.1162/neco.1997.9.8.1735

2022 Cybernetics & Informatics (K&I) | 978-1-6654-8775-7/22/$31.00 ©2022 IEEE | DOI: 10.1109/KI55792.2022.9925948

PROCEEDINGS

of the

International Conference

2022 Cybernetics & Informatics (K&I)

organised by the

Slovak Society of Cybernetics and Informatics
at the Slovak Academy of Sciences

under the auspices of the

Faculty of Electrical Engineering and Information Technology
Slovak University of Technology in Bratislava
Slovak Republic

Visegrád, Hungary
September 11-14, 2022

PROCEEDINGS

of the International Conference

2022 Cybernetics & Informatics (K&I)

2022 Cybernetics & Informatics (K&I) | 978-1-6654-8775-7/22/$31.00 ©2022 IEEE | DOI: 10.1109/KI55792.2022.9925977

IEEE Catalog Number CFP22E30-ART

ISBN 978-1-6654-8775-7

Technical Program Committee

Chair: Š. Kozák (SK)
Vice-chair: B. Kiss (HU)
Members:

R. Bars (H)	C. Belavý (SK)	S. Bogdan (HR)
I. Budinská (SK)	S. Czanner (HU)	P. Drahoš (SK)
M. Fikar (SK)	A.L. Fradkov (RU)	E. Gyurkovics (H)
R. Haber (D)	J. Haddad (IL)	O. Haffner (SK)
R. Hampel (D)	M. Hovd (N)	A. Ichtev (BG)
A. Janota (SK)	T. Kaczorek (PL)	Z. Kovačić (HR)
D. Krokavec (SK)	U. Kotta (EST)	E. Kučera (SK)
V. Kučera (CZ)	J. Lacko (SK)	M. Kvasnica (SK)
C.H. Moog (F)	M.S. Moteleb (EG)	M. Huba (SK)
P. Pakshin (RU)	R.E. Precup (RO)	B. Ramic-Brkic (BA)
S. Rizvic (BA)	P. Tanuška (SK)	T. Puleva (BG)
B. Rohaľ-Ilkiv (SK)	P. Sinčák (SK)	S. Skogestad (N)
V. Slavov (BG)	M. Šebek (CZ)	I. Taralova (FR)
B. Tovornik (SI)	V. Veselý (SK)	M. Vítečková (CZ)
D. Vrančič (SI)	T. Zubowicz (PL)	

Organizing Committee

Chair: D. Rosinová (SK)
Secretary: A. Kozáková (SK)
Members:

P. Bisták	J. Cigánek,	O. Haffner	M. Hypiusová
K. Knežíková	M. Kocúr,	L. Körösi	E. Kučera
E. Ružický	F. Žemla		

Editors

Ján Cigánek (SK), Štefan Kozák (SK), Alena Kozáková (SK)

Graphical Design

Erik Kučera (SK)

K&I '22 Visegrád

IEEE

2022 CYBERNETICS & INFORMATICS (K&I)
31st INTERNATIONAL CONFERENCE
September 11 - 14, 2022, Visegrád, Hungary

PROCEEDINGS

2022 Cybernetics & Informatics (K&I) | 978-1-6654-8775-7/22/$31.00 ©2022 IEEE | DOI: 10.1109/KI55792.2022.9925953

IEEE Catalog Number: CFP22E30-ART
ISBN: 978-1-6654-8775-7

C1 – Modelling and Control I

C1.1. IMPROVEMENT OF MEASUREMENT DYNAMICS BASED ON EXTENDED KALMAN FILTER
Miroslava Baraharska, Tsonyo Slavov and Ivan Markovsky

C1.2 ROBUST LIQUID LEVEL CONTROL WITH UNCERTAIN FLOWS AND SPEED LIMITATION
Denis Vasko and Ján Kardoš

C1.3 ANOMALY DETECTION IN CONTROL SYSTEMS WITH INTERVAL DISSIMILARITY
Marco Kemmerling, Maciej Combrzynski-Nogala, Marc Haßler, Chrismarie Enslin, Daniel Lütticke and Robert H. Schmitt

C1.4 HYDRO TURBINE SPEED CONTROL BASED ON ADAPTIVE DISTURBANCE REJECTION
Teofana Puleva and Tsonyo Slavov

C1.5 HYBRID INTELLIGENT MPC IN INDUSTRY
Peter Karas and Štefan Kozák

D1 – Poster Session

D1.1 DESIGN AND IMPLEMENTATION OF THE APPLICATION FOR THE IRRIGATION SYSTEM
Filip Žemla and Ján Cigánek

D1.2 LOW LEVEL MODELING OF DISCRETE SYSTEMS
Juraj Štefanovič

D1.3 INTERACTIVE 3D MODEL OF BALL AND PLATE SYSTEM
Hanna Hryharouskaya, Katarína Žáková, Jakub Matišák and Ján Šefčík

D1.4 ADVANCED INTELLIGENT PLATFORM FOR SMALL AUTONOMNOUS VEHICLES
Michal Kocúr, Peter Ťapák, Zuzana Képešiová and Štefan Kozák

D1.5 HOLOGRAM IN CONTROL APPLICATIONS
Jakub Matišák, Katarína Žáková and Matej Rábek

D1.6 CONTROL OF A CHEMICAL REACTOR WITH HIGH PRECISION ENCRYPTION FRAMEWORK
Matúš Furka, Karol Kiš and Martin Klaučo

D1.7 MULTIPLATFORM SUPPORT FOR UDAQ28/LT THERMO-OPTICAL PLANT
Ján Šefčík and Katarína Žáková

D1.8 VIRTUALIZATION AS A MODERN TOOL FOR DESIGN AND IMPLEMENTATION OF ROBOTIC APPLICATIONS
Bohuslava Juhásová, Martin Juhás and Eduard Nemlaha

D1.9 IMPLEMENTATION OF HETEROGENEOUS MULTIROBOTIC CELL CONTROL USING VISUALIZATION TECHNIQUES
Martin Juhás, Bohuslava Juhásová and Pavel Važan

D1.10 CONTROL DESIGN FOR A NONLINEAR REACTORS-SEPARATOR PLANT
Michaela Horváthová, Lenka Galčíková and Juraj Oravec

D1.11 COMPARISON OF NEURAL MODELS FOR DYNAMIC CHANGES MODELING IN MICROGRIDS
Slavomír Kajan, Peter Mácsik, Ladislav Körösi, Jozef Goga and Jarmila Pavlovičová

D1.12 DIGITAL TWIN PROPOSAL USING THE MATLAB-STATEFLOW MODEL AND DOCKER CONTAINERS
Lenka Halenárová, Igor Halenar and Pavol Tanuška

P2 – Plenary Session II

P2.1 INTERNET OF VEHICLES – A FUSION OF TECHNOLOGIES AND CONCEPTS FOR